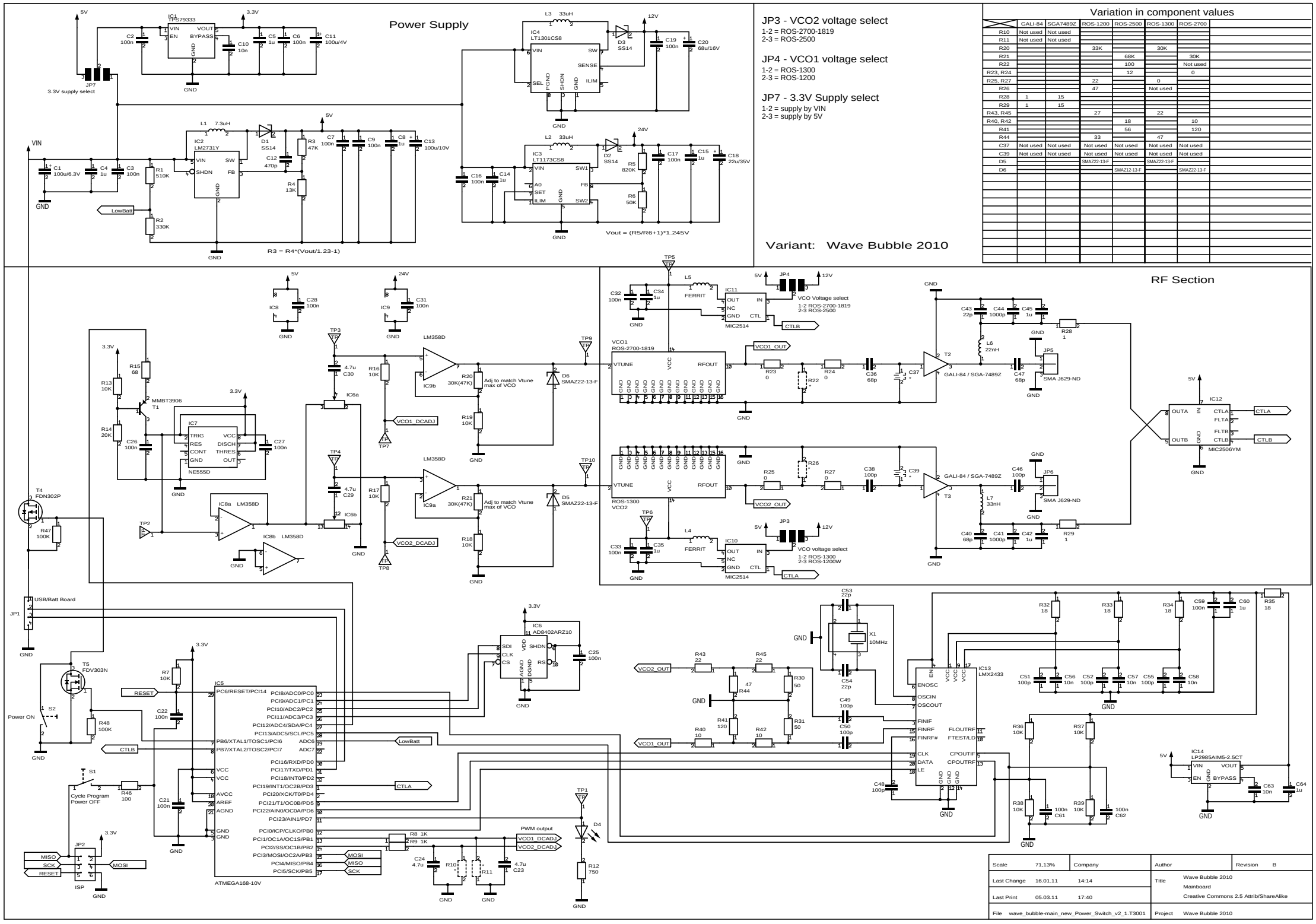

Variation in component values

	GALI-84	SGA7489Z	ROS-1200	ROS-2500	ROS-1300	ROS-2700
R10	Not used	Not used				
R11	Not used	Not used				
R20			33K		30K	
R21				68K		30K
R22				100		Not used
R23, R24				12		0
R25, R27			22		0	
R26			47		Not used	
R28	1	15				
R29	1	15				
R43, R45			27		22	
R40, R42				18		10
R41				56		120
R44			33		47	
C37	Not used	Not used	Not used	Not used	Not used	Not used
C39	Not used	Not used	Not used	Not used	Not used	Not used
D5			SMAZ22-13-F		SMAZ22-13-F	
D6				SMAZ12-13-F		SMAZ22-13-F

Scale	71,13%	Company	Author / Revision B
Last Change	16.01.11	14:14	Title: Wave Bubble 2010 Mainboard
Last Print	05.03.11	17:40	Creative Commons 2.5 Attrib/ShareAlike
File	wave_bubble-main_new_Power_Switch_v2_1.T3001		Project: Wave Bubble 2010